EE352 Automatic Control

Prof. Lilantha Samaranayake

Department of Electrical and Electronic Engineering
University of Peradeniya
Deep Vision, Bright Future

Modeling of Practical Systems

- Practical Systems
- Modeling of Electric Networks
- Modeling of Mechanical Systems
- Modeling of Complete Systems

Department of Electrical and
Electronic Engineering
University of Peradeniya
Deep Vision, Bright Future

Practical Systems

- One of the most important things in the analysis and design of control systems is the mathematical modelling of the systems.
- Transfer functions can be used to model Linear Time Invariant (LTI) systems.
- State equations can be used to model linear as well as nonlinear systems.

Modeling of Electric Networks

- Consider the electric network below:

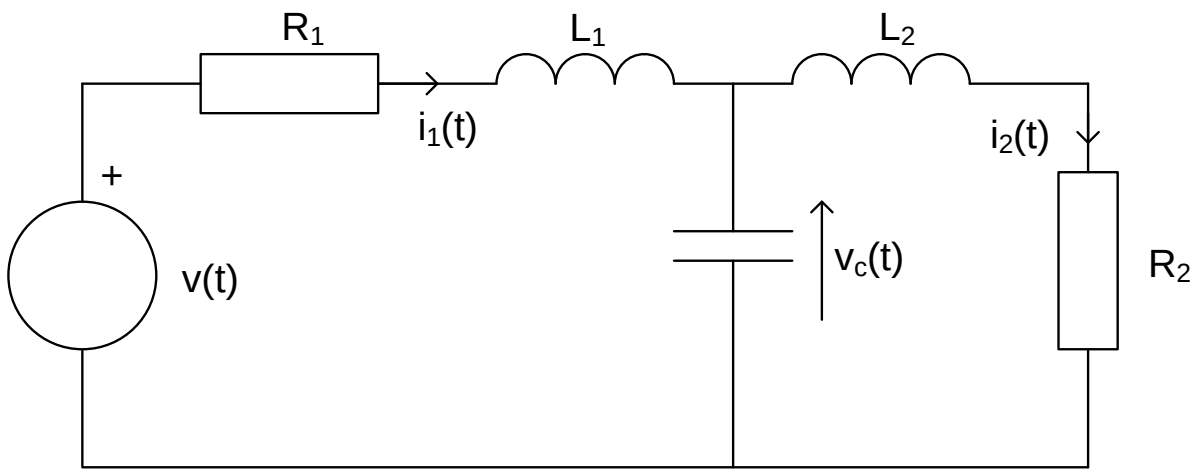

- Apply Kirchhoff's voltage law and write mesh equations
- Define a state vector
- Represent the electric network in State Space

Department of Electrical and Electronic Engineering
University of Peradeniya
Deep Vision, Bright Future

Electric network contd.,

- Mesh equations

$$\frac{di_1(t)}{dt} = -\frac{R_1}{L_1} i_1(t) - \frac{1}{L_1} v_c(t) + \frac{1}{L_1} v(t)$$

$$\frac{di_2(t)}{dt} = -\frac{R_2}{L_2} i_2(t) + \frac{1}{L_2} v_c(t)$$

$$\frac{dv_c(t)}{dt} = \frac{1}{C} i_1(t) - \frac{1}{C} i_2(t)$$

- State vector $x(t) = \begin{bmatrix} i_1(t) \\ i_2(t) \\ v_c(t) \end{bmatrix}$
- State space representation $\frac{dx}{dt} = Ax + Bu, \mathrm{y} = \mathrm{Cx} + \mathrm{Du}$
- $A = \begin{bmatrix} -\frac{R_1}{L_1} & 0 & -\frac{1}{L_1} \\ 0 & -\frac{R_2}{L_2} & \frac{1}{L_2} \\ \frac{1}{C} & -\frac{1}{C} & 0 \end{bmatrix}, B = \begin{bmatrix} \frac{1}{L_1} \\ 0 \\ 0 \end{bmatrix}, C = \begin{bmatrix} 0 & 1 & 0 \end{bmatrix}$

Modeling of Mechanical Systems

- Most control system contain
  - mechanical system components
  - electrical system components
  - hydraulic system components (compressed liquid)
  - pneumatic system components (compressed air/gas)
  - Etc.
- From a mathematical point of view, the description of electrical elements and mechanical elements are analogous.
- In fact, we can show that given an electrical element, there is an analogous mechanical counterpart (at least mathematically) and vise versa.
- The motion of mechanical elements can be described in various dimensions as Translational, Rotational or as a combination of them.
- The equations governing the motions of mechanical systems are often formulated directly or indirectly from Newton's laws of motion.

Mechanical Systems - Translational motion I

- Consider a mass M moving in a straight line

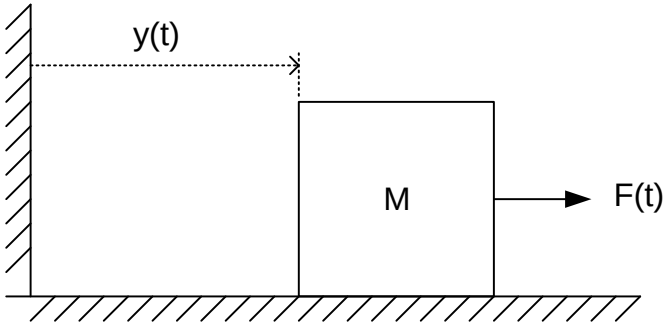

- Newton's laws of motion give

$$\sum F = Ma = M\frac{d^2y(t)}{dt^2} = M\frac{dv(t)}{dt}$$

Where v - velocity, a - acceleration, y - position and F – external unbalanced force

Department of Electrical and Electronic Engineering
University of Peradeniya
Deep Vision, Bright Future

Mechanical Systems - Translational motion II

- The spring is an element used to store mechanical energy.
- Generally it is a nonlinear device.
- If the deformation is small, its behavior can be approximated by a linear relationship as

$$f(t) = ky(t)$$

where *k* is the spring constant (stiffness).

Translational motion III - Friction

- Whenever there is motion or a tendency for motion between two physical elements, there exist frictional forces.

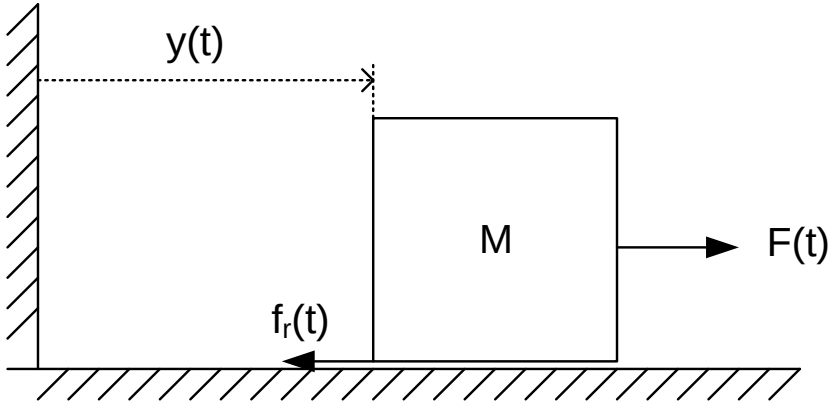

- Three different types of frictional forces exist. They are
  - Viscous friction
  - Static friction
  - Coulomb friction

Department of Electrical and Electronic Engineering
University of Peradeniya
Deep Vision, Bright Future

Translational motion III contd., Viscous friction

- Retarding force that has a linear relationship between the frictional force and velocity as can be given by

$$f_r(t) = B\frac{dy(t)}{dt}$$

where *B* is the viscous friction coefficient.

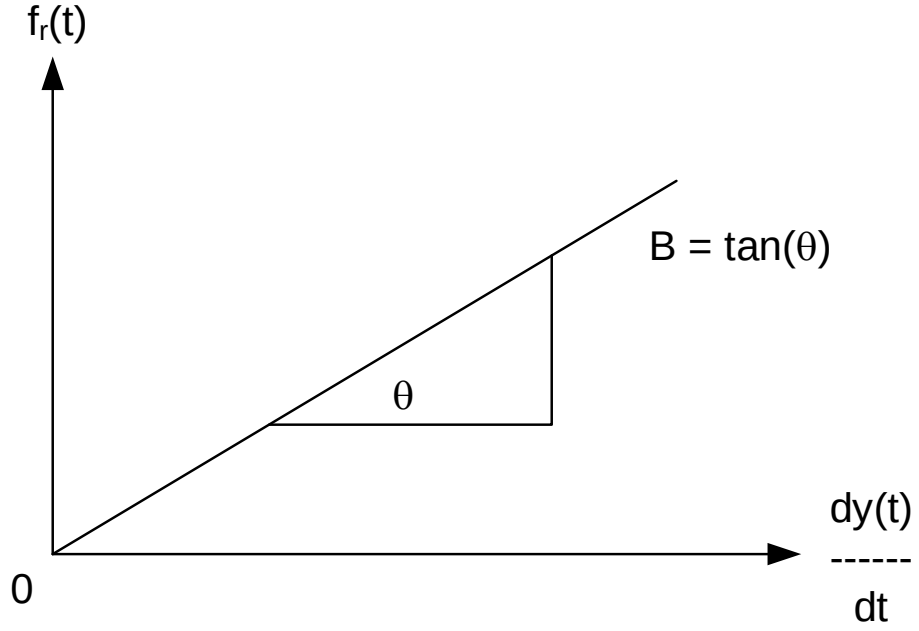

Department of Electrical and Electronic Engineering
University of Peradeniya
Deep Vision, Bright Future

Translational motion III contd., Static friction

- Retarding force which tries to prevent the motion from the beginning.
- The static frictional forces can be represented by

$$f_r(t) = \pm F_s, \frac{dy(t)}{dt} = 0$$

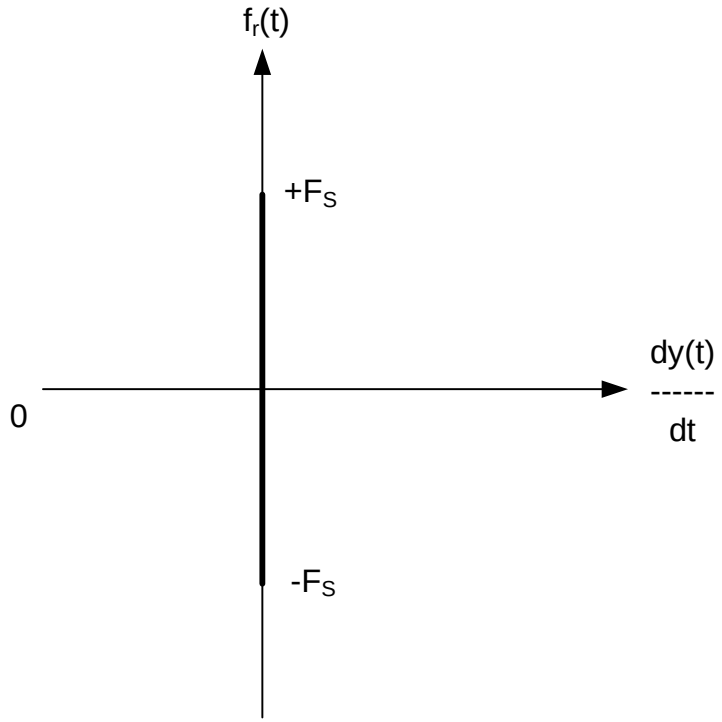

Department of Electrical and Electronic Engineering
University of Peradeniya
Deep Vision, Bright Future

Translational motion III contd., Coulomb friction

- Retarding force which has a constant amplitude with respect to the change of velocity.
- The sign of the frictional force changes with the reversal of the direction of the velocity.
- It can be represented mathematically by

$$f_r(t) = F_c \frac{\frac{dy(t)}{dt}}{\left|\frac{dy(t)}{dt}\right|}$$

where F_c is the Coulomb friction coefficient.

Rotational motion I

- The rotational motion is about moving around a fixed axis.
- The extension of Newton's laws of motion states that $\Sigma T = J\alpha$
- *ΣT* is the external unbalanced resultant torque, *J* is the second moment of inertia of the rotational body and *α* is the angular acceleration of the rotational body with respect to earth reference frame.
- Other common variables to describe the rotational motion are angular velocity *ω* and angular position *ϑ*.
- Moment of inertia is considered to be a property of an element that stores energy. The kinetic energy is obtained from the rotational motion and depends on the geometric composition about the axis of rotation, dimensions and its density.
- For example, a disk of radius *r* and mass *M* has a second moment of inertia about an axis through its centre perpendicular to the surface is

$$J = \frac{1}{2}Mr^2$$

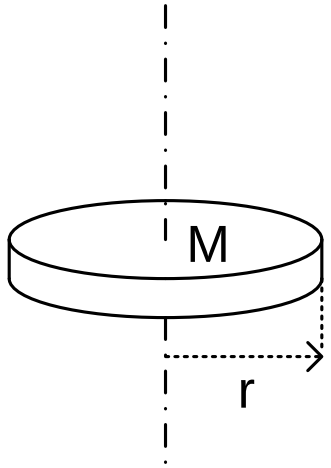

Rotational motion II

- By applying Newton's second law of motion to the rotational disk

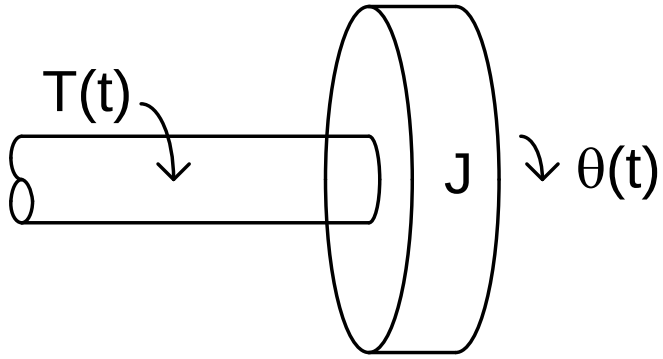

$$T(t) = J\alpha = J\frac{d\omega(t)}{dt} = J\frac{d^2\theta(t)}{dt^2}$$

Department of Electrical and
Electronic Engineering
University of Peradeniya
Deep Vision, Bright Future

Rotational motion III – Torsional spring

- Analogous to the spring in the linear motion, there exist torsional spring in rotational motion.
- Its torque to angular displacement can be given as $T(t) = K\theta(t)$
- *K* is the torsional spring constant.

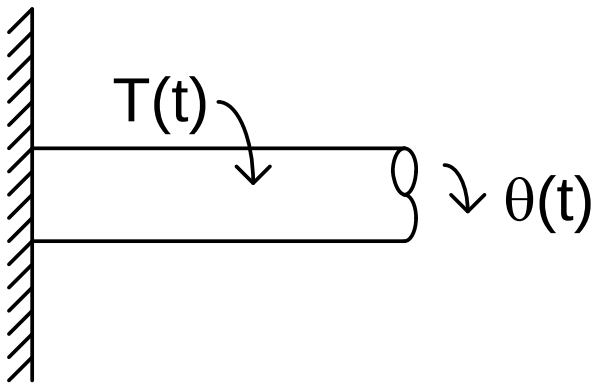

Department of Electrical and Electronic Engineering
University of Peradeniya
Deep Vision, Bright Future

Rotational motion IV – Friction

- Analogous to the linear motion, friction also exists in three forms in the rotational case.
- They are
  - Viscous Friction, whose torque to angular displacement relationship can be described by $T_r(t) = B\,\frac{d\theta(t)}{dt}$
  - Static Friction described by $T_r(t) = \pm F_{s|\frac{d\theta}{dt}=0}$ where *Fs* is the static friction force.
  - Coulomb Friction described by $T_r(t) = F_c \frac{\frac{d\theta(t)}{dt}}{\left|\frac{d\theta(t)}{dt}\right|}$

Department of Electrical and Electronic Engineering
University of Peradeniya
Deep Vision, Bright Future

Conversion between translational & rotational motion

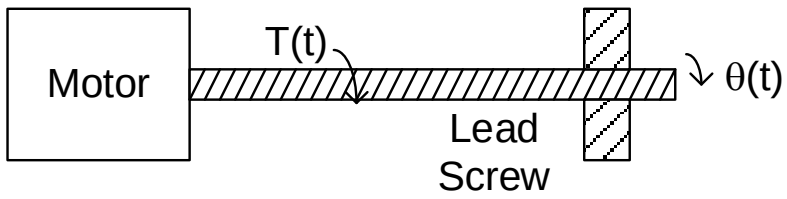

Lead screw

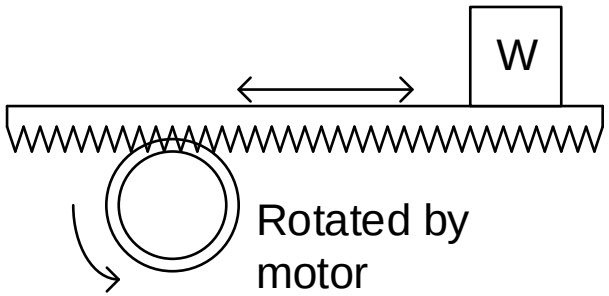

Rack and pinion

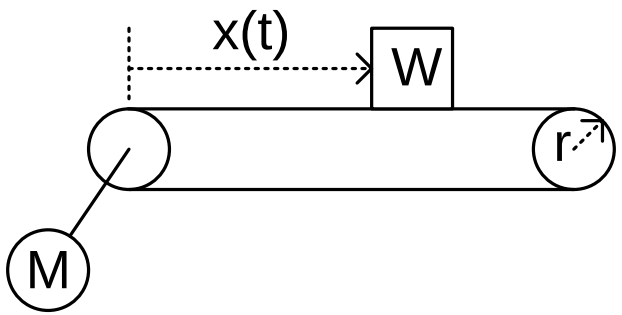

Conveyor

- If *r* is the radius of the wheel, neglecting the inertia of the pulley, the equivalent inertia that is seen by the motor is $J_{eq} = \frac{W}{g} r^2$
- All three systems above are similar by purpose. If *L* is the pitch of the lead screw in the first case, the distance travelled by the object weight *W* per revolution is *2πr.* Hence $L = 2\pi r$.
- Therefore the equivalent inertia of the rotating motor screw assembly is $J_{eq} = \frac{W}{g}\left(\frac{L}{2\pi}\right)^2$

Department of Electrical and
Electronic Engineering
University of Peradeniya
Deep Vision, Bright Future

Gear trains

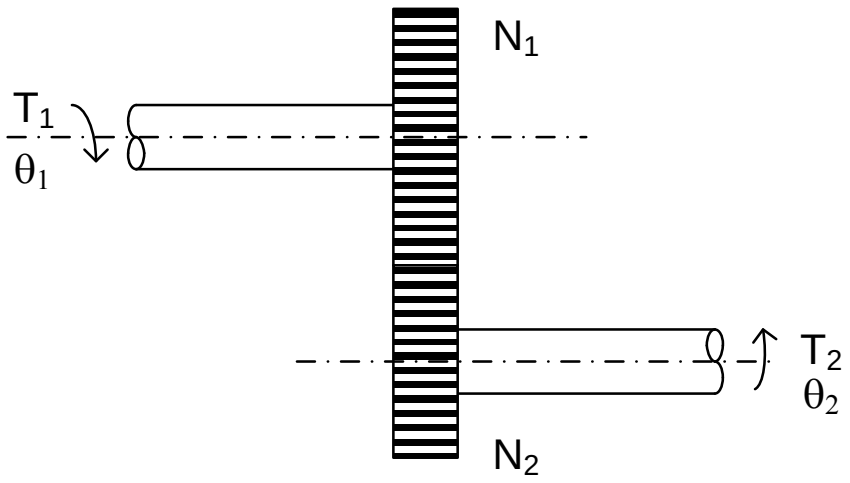

- Consider the gear train:

- If T_i is the torque applied on the shaft, ϑ_i is the angular displacement and N_i is the number of teeth on the wheel and r_i is its radius for *i = 1,2*
- From the geometry: $\frac{r_1}{r_2} = \frac{N_1}{N_2}$
- The distance travelled along the surface of each gear is the same. Therefore: $r_1\theta_1 = r_2\theta_2$. Hence $\frac{r_1}{r_2} = \frac{\theta_2}{\theta_1} = \frac{\omega_2}{\omega_1}$.
- Assuming no losses, input power = output power. Therefore $T_1\omega_1 = T_2\omega_2$. Hence $\frac{r_1}{r_2} = \frac{N_1}{N_2} = \frac{\theta_2}{\theta_1} = \frac{\omega_2}{\omega_1} = \frac{T_1}{T_2}$.

Reduction gearbox

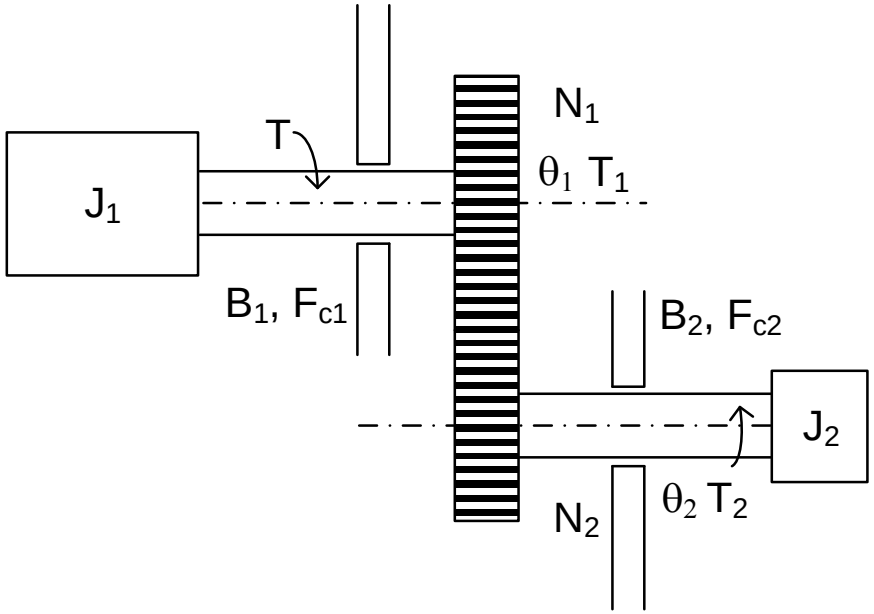

- Let T be the externally applied torque from the motor, T_1 and T_2 be the transmitted torques, F_{c1} and F_{c2} be the Coulomb friction coefficients and let B_1 and B_2 be the Viscous friction coefficients.
- Considering the rotational motion of the inertia 2:

$$T_2(t) - B_2 \frac{d\theta_2(t)}{dt} - F_{c2} \frac{\frac{d\theta_2(t)}{dt}}{\left|\frac{d\theta_2(t)}{dt}\right|} = J_2 \frac{d^2\theta_2(t)}{dt^2}.$$

Department of Electrical and Electronic Engineering
University of Peradeniya
Deep Vision, Bright Future

Reduction gearbox contd.,

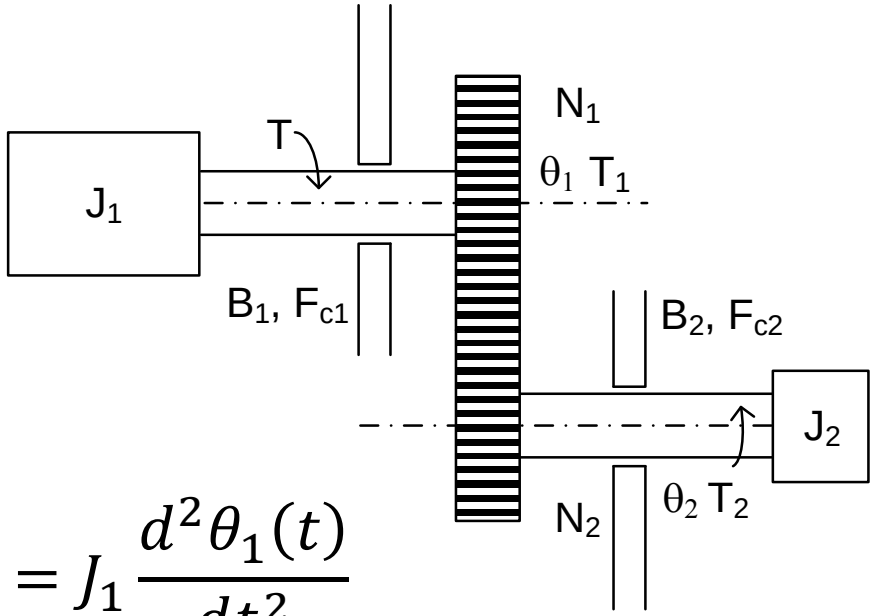

- Similarly for the inertia 1:

$$T(t) - T_1(t) - B_1 \frac{d\theta_1(t)}{dt} - F_{c1} \frac{\frac{d\theta_1(t)}{dt}}{\left|\frac{d\theta_1(t)}{dt}\right|} = J_1 \frac{d^2\theta_1(t)}{dt^2}$$

- Combining the above two equations and using the relationship $T_1 = \frac{N_1}{N_2} T_2$;

$$T(t) = J_{eq} \frac{d^2\theta_1(t)}{dt^2} + B_{eq} \frac{d\theta_1(t)}{dt} + F_{ceq} \frac{\frac{d\theta_1(t)}{dt}}{\left|\frac{d\theta_1(t)}{dt}\right|}$$

- Where, $J_{eq} = J_1 + \left(\frac{N_1}{N_2}\right)^2 J_2$, $B_{eq} = B_1 + \left(\frac{N_1}{N_2}\right)^2 B_2$, $F_{ceq} = F_{c1} + \left(\frac{N_1}{N_2}\right) F_{c2}$

Example 1(a): Horizontal Spring Mass Damper

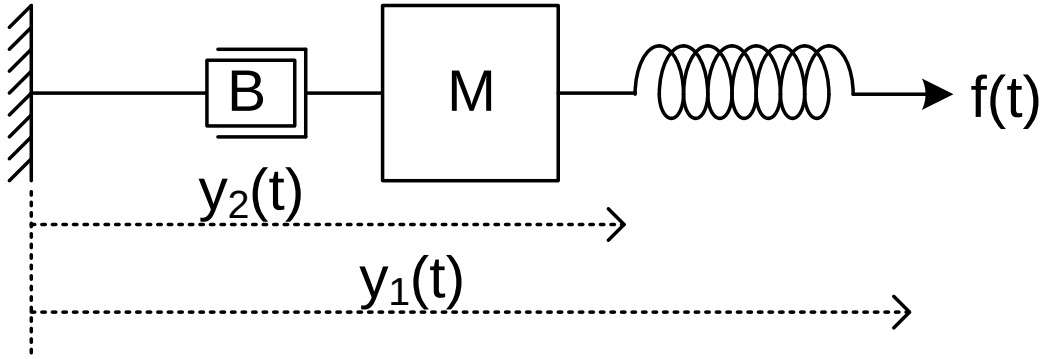

(a)

- System – (a)
- Free body diagrams – (b) & (c)
- Use Newton's laws of motion to obtain the governing equations
- Define the state vector
- Obtain the state space representation of the system

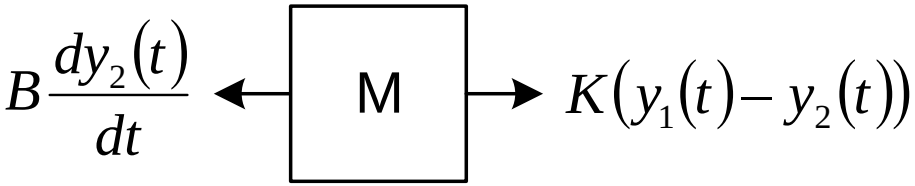

(b)

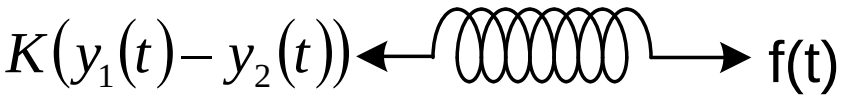

(c)

Department of Electrical and Electronic Engineering
University of Peradeniya
Deep Vision, Bright Future

Horizontal Spring Mass Damper contd.,

- Apply Newton's 2nd law of motion for the spring and the mass

$$f(t) - K\big(y_1(t) - y_2(t)\big) = 0$$

$$K\big(y_1(t) - y_2(t)\big) - B\frac{dy_2(t)}{dt} = M\frac{d^2y_2(t)}{dt^2}$$

- Select the state $x(t) = \begin{bmatrix} x_1(t) \\ x_2(t) \end{bmatrix}$, where $y_2(t) = x_1(t)$ & $\frac{dy_2(t)}{dt} = x_2(t)$

$$\frac{dx_1(t)}{dt} = x_2(t)$$

$$\frac{dx_2(t)}{dt} = -\frac{B}{M}x_2(t) + \frac{1}{M}f(t)$$

- Define the state space $\frac{d\boldsymbol{x}(t)}{dt} = \boldsymbol{A}\boldsymbol{x}(t) + \boldsymbol{B}\mathrm{u}(t)$ and $y(t) = \boldsymbol{C}\boldsymbol{x}(t) + \boldsymbol{D}\mathrm{u}(t)$
- Where $A = \begin{bmatrix} 0 & 1 \\ 0 & -\frac{B}{M} \end{bmatrix}$, $B = \begin{bmatrix} 0 \\ \frac{1}{M} \end{bmatrix}$, $C = \begin{bmatrix} 0 & 1 \end{bmatrix}$, $D = [0]$

Department of Electrical and Electronic Engineering
University of Peradeniya
Deep Vision, Bright Future

Example 1(b): Vertical Spring Mass Damper

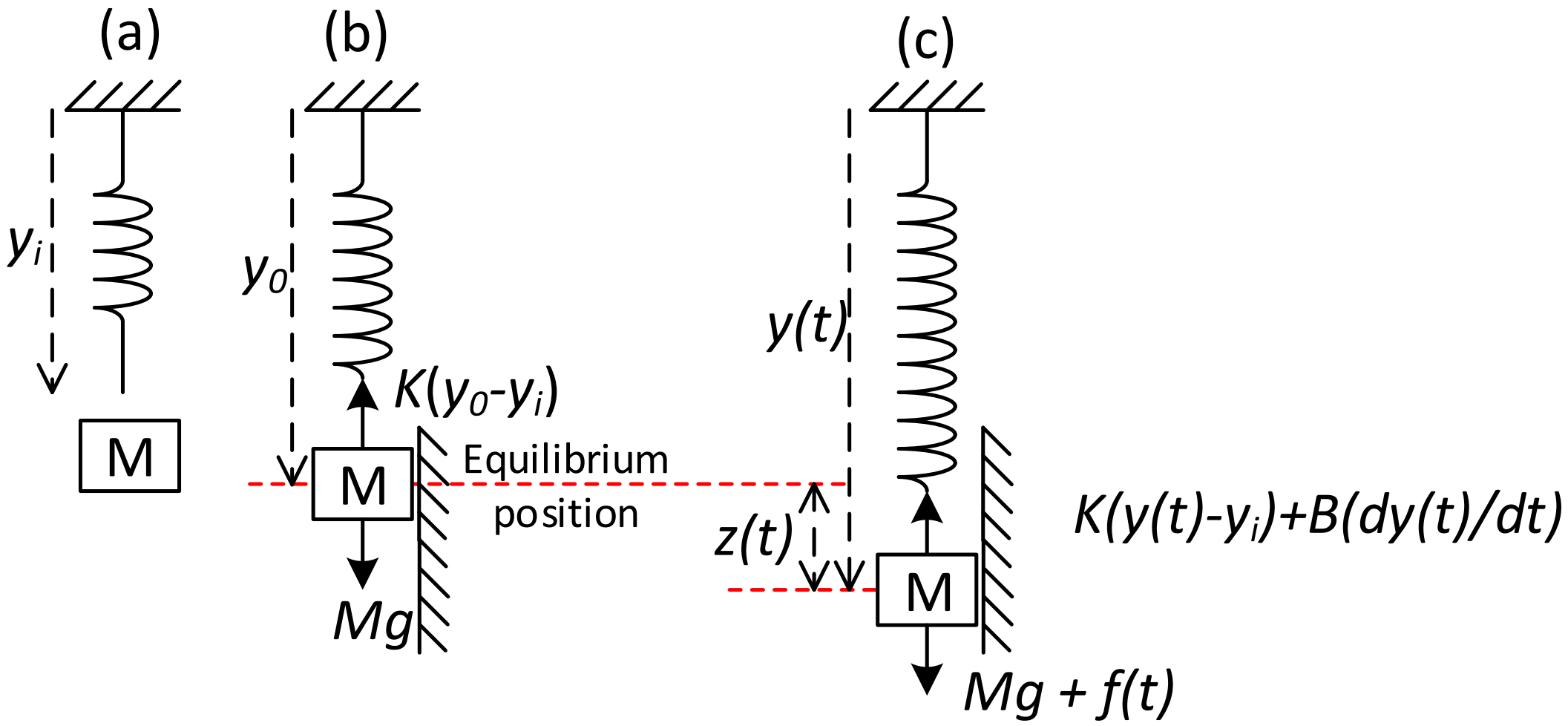

Vertical Spring Mass Damper contd.,

- With spring initial length y_i as in (a), when the mass M is connected, the system comes to equilibrium when $Mg = K(y_0 - y_i)$ as shown in (b).
- When an external force $f(t)$ is applied as in (c), the instantaneous position is taken as $y(t)$ and the Newton's 2nd law of motion holds as

$$Mg + f(t) - K(y(t) - y_i) - B\frac{dy(t)}{dt} = M\frac{d^2y(t)}{dt^2},$$

- But $Mg - K(y_0 - y_i) = 0$. Therefore

$$f(t) - K(y(t) - y_0) - B\frac{dy(t)}{dt} = M\frac{d^2y(t)}{dt^2}$$

- By selecting $z(t) = y(t) - y_0$,

$$f(t) - Kz(t) - B\frac{dz(t)}{dt} = M\frac{d^2z(t)}{dt^2}$$

Vertical Spring Mass Damper contd.,

- By taking Laplace transformations of $f(t) - Kz(t) - B\frac{dz(t)}{dt} = M\frac{d^2z(t)}{dt^2}$

$$F(s) - KZ(s) - BsZ(s) = Ms^2Z(s)$$

- Hence the transfer function is

$$\frac{Z(s)}{F(s)} = \frac{1}{Ms^2 + Bs + K}$$

- By defining the states as $x_1(t) = z(t)$ and $x_2(t) = \frac{dz(t)}{dt}$, $\frac{dx_1(t)}{dt} = x_2(t)$ and $\frac{dx_2(t)}{dt} = -\frac{K}{M}x_1(t) - \frac{B}{M}x_2(t) + \frac{1}{M}f(t)$
- Hence the state space representation of the system is

$$\begin{pmatrix} \frac{dx_1(t)}{dt} \\ \frac{dx_2(t)}{dt} \end{pmatrix} = \begin{pmatrix} 0 & 1 \\ -\frac{K}{M} & -\frac{B}{M} \end{pmatrix} \begin{pmatrix} x_1 \\ x_2 \end{pmatrix} + \begin{pmatrix} 0 \\ \frac{1}{M} \end{pmatrix} f(t)$$

$$y(t) = \begin{pmatrix} 1 & 0 \end{pmatrix} \begin{pmatrix} x_1 \\ x_2 \end{pmatrix}$$

Example 2: Vertical Double Spring Mass Damper System

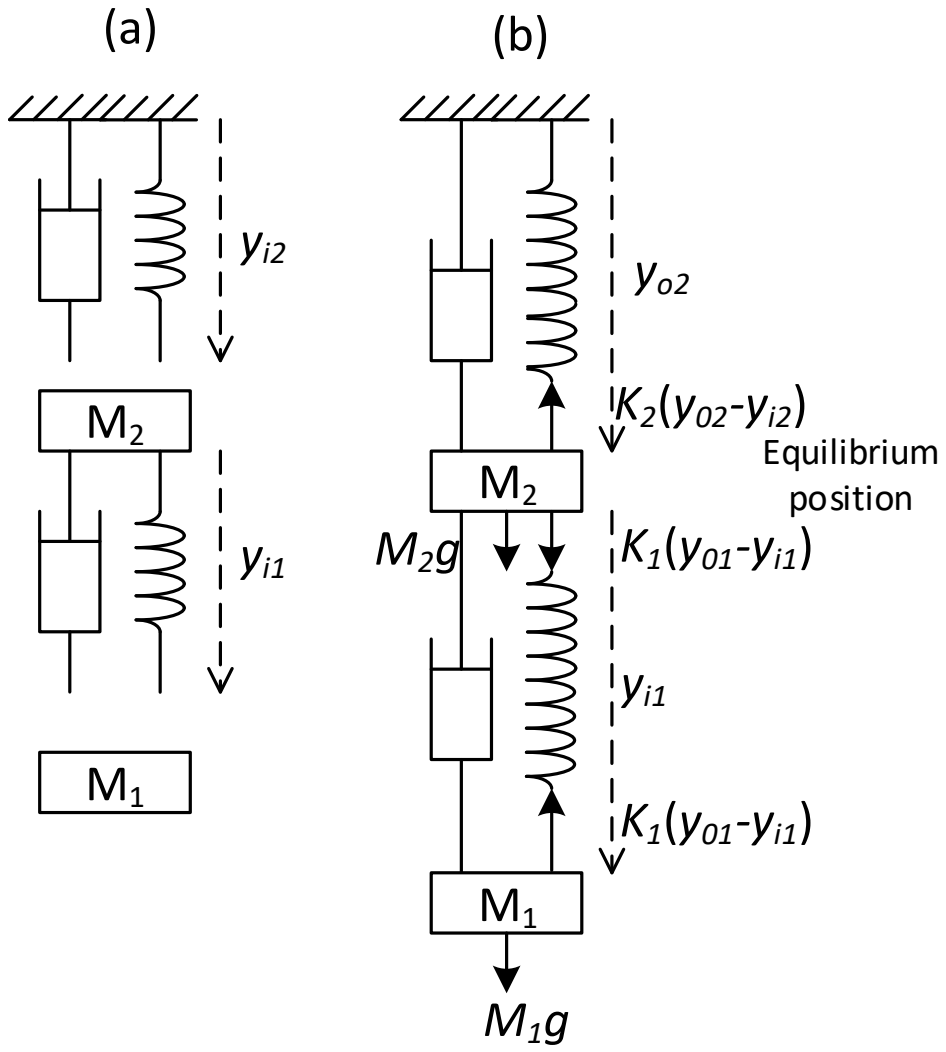

With the external force f(t) applied

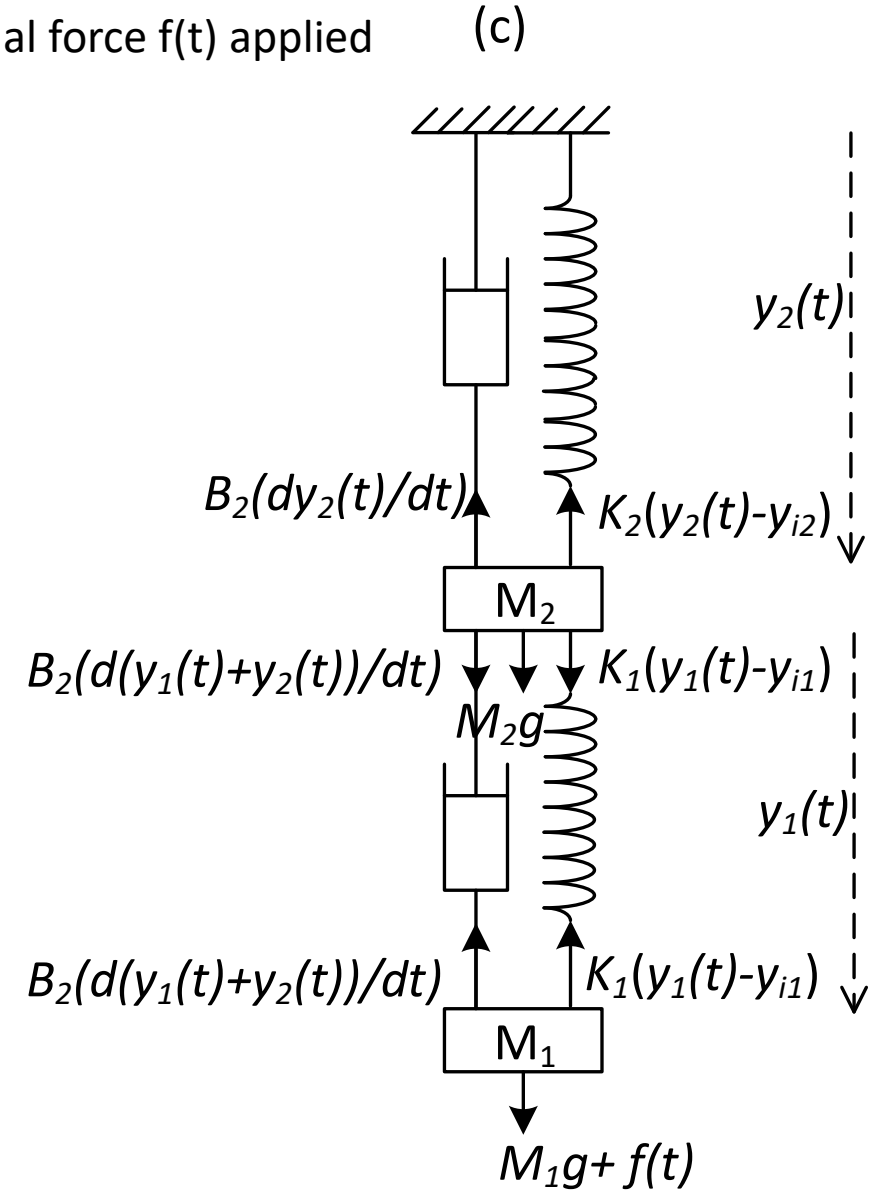

At equilibrium:

$$M_1 g - K_1(y_{01} - y_{i1}) = 0$$

$$M_2 g + K_1(y_{01} - y_{i1}) - K_2(y_{02} - y_{i2}) = 0$$

Vertical Double Spring Mass Damper contd., (ii)

- Applying Newton's 2nd Law of Motion:
- Mass M_1:

$$M_1 g + f(t) - B_1 \frac{d\big(y_1(t) + y_2(t)\big)}{dt} - K_1(y_1(t) - y_{i1}) = M_1 \frac{d^2\big(y_1(t) + y_2(t)\big)}{dt^2}$$

- From equilibrium condition of Mass M_1

$$M_1 g - K_1(y_{01} - y_{i1}) = 0$$

- Hence

$$f(t) - B_1 \frac{d\big(y_1(t) + y_2(t)\big)}{dt} - K_1(y_1(t) - y_{01}) = M_1 \frac{d^2\big(y_1(t) + y_2(t)\big)}{dt^2}$$

- That is

$$\frac{1}{M_1} f(t) - \frac{B_1}{M_1}\frac{dy_1(t)}{dt} - \frac{B_1}{M_1}\frac{dy_2(t)}{dt} - \frac{K_1}{M_1}(y_1(t) - y_{01}) = \frac{d^2 y_1(t)}{dt^2} + \frac{d^2 y_2(t)}{dt^2}$$

Vertical Double Spring Mass Damper contd., (iii)

- Applying Newton's 2nd Law of Motion:
- Mass M_2:

$$M_2 g + B_1 \frac{d\big(y_1(t) + y_2(t)\big)}{dt} + K_1(y_1(t) - y_{i1}) - K_2(y_2(t) - y_{i2}) - B_2 \frac{dy_2(t)}{dt} = M_2 \frac{d^2 y_2(t)}{dt^2}$$

- From equilibrium condition of Mass M_2

$$M_2 g + K_1(y_{01} - y_{i1}) - K_2(y_{02} - y_{i2}) = 0$$

- Hence

$$B_1 \frac{d\big(y_1(t) + y_2(t)\big)}{dt} + K_1(y_1(t) - y_{01}) - K_2(y_2(t) - y_{02}) - B_2 \frac{dy_2(t)}{dt} = M_2 \frac{d^2 y_2(t)}{dt^2}$$

- That is

$$\frac{B_1}{M_2}\frac{dy_1(t)}{dt} + \frac{B_1}{M_2}\frac{dy_2(t)}{dt} - \frac{B_2}{M_2}\frac{dy_2(t)}{dt} + \frac{K_1}{M_2}(y_1(t) - y_{01}) - \frac{K_2}{M_2}(y_2(t) - y_{02}) = \frac{d^2 y_2(t)}{dt^2}$$

Vertical Double Spring Mass Damper contd., (iv)

- Now that we have

$$\frac{d^2y_1(t)}{dt^2}+\frac{d^2y_2(t)}{dt^2}=\frac{1}{M_1}f(t)-\frac{B_1}{M_1}\frac{dy_1(t)}{dt}-\frac{B_1}{M_1}\frac{dy_2(t)}{dt}-\frac{K_1}{M_1}(y_1(t)-y_{01})$$

$$\frac{d^2y_2(t)}{dt^2}=\frac{B_1}{M_2}\frac{dy_1(t)}{dt}+\frac{B_1}{M_2}\frac{dy_2(t)}{dt}-\frac{B_2}{M_2}\frac{dy_2(t)}{dt}+\frac{K_1}{M_2}(y_1(t)-y_{01})-\frac{K_2}{M_2}(y_2(t)-y_{02})$$

- We get $\frac{d^2y_1(t)}{dt^2}=\frac{1}{M_1}f(t)-\left(\frac{B_1}{M_1}+\frac{B_1}{M_2}\right)\frac{dy_1(t)}{dt}-\left(\frac{B_1}{M_1}+\frac{B_1}{M_2}\right)\frac{dy_2(t)}{dt}+\frac{B_2}{M_2}\frac{dy_2(t)}{dt}-\left(\frac{K_1}{M_1}+\frac{K_1}{M_2}\right)(y_1(t)-y_{01})+\frac{K_2}{M_2}(y_2(t)-y_{02})$
- By choosing $z_1(t)=y_1(t)-y_{01}$ and $z_2(t)=y_2(t)-y_{02}$
- $\frac{d^2z_1(t)}{dt^2}=\frac{1}{M_1}f(t)-\left(\frac{B_1}{M_1}+\frac{B_1}{M_2}\right)\frac{dz_1(t)}{dt}-\left(\frac{B_1}{M_1}+\frac{B_1}{M_2}\right)\frac{dz_2(t)}{dt}+\frac{B_2}{M_2}\frac{dz_2(t)}{dt}-\left(\frac{K_1}{M_1}+\frac{K_1}{M_2}\right)z_1(t)+\frac{K_2}{M_2}z_2(t)$
- $\frac{d^2z_2(t)}{dt^2}=\frac{B_1}{M_2}\frac{dz_1(t)}{dt}+\frac{B_1}{M_2}\frac{dz_2(t)}{dt}-\frac{B_2}{M_2}\frac{dz_2(t)}{dt}+\frac{K_1}{M_2}z_1(t)-\frac{K_2}{M_2}z_2(t)$

Vertical Double Spring Mass Damper contd., (v)

- By defining the states

$$w_1(t) = z_1(t), w_2(t) = \frac{dz_1(t)}{dt}, w_3(t) = z_2(t), w_4(t) = \frac{dz_2(t)}{dt}$$

$$\frac{dw_1(t)}{dt} = w_2(t), \frac{dw_3(t)}{dt} = w_4(t)$$

- Hence the equation $\frac{d^2z_1(t)}{dt^2} = \frac{1}{M_1}f(t) - \left(\frac{B_1}{M_1} + \frac{B_1}{M_2}\right)\frac{dz_1(t)}{dt} - \left(\frac{B_1}{M_1} + \frac{B_1}{M_2}\right)\frac{dz_2(t)}{dt} + \frac{B_2}{M_2}\frac{dz_2(t)}{dt} - \left(\frac{K_1}{M_1} + \frac{K_1}{M_2}\right)z_1(t) + \frac{K_2}{M_2}z_2(t)$ becomes

$$\frac{dw_2(t)}{dt} = \frac{1}{M_1}f(t) - \left(\frac{B_1}{M_1} + \frac{B_1}{M_2}\right)w_2(t) - \left(\frac{B_1}{M_1} + \frac{B_1}{M_2}\right)w_4(t) + \frac{B_2}{M_2}w_4(t) - \left(\frac{K_1}{M_1} + \frac{K_1}{M_2}\right)w_1(t) + \frac{K_2}{M_2}w_3(t)$$

- Similarly, equation $\frac{d^2z_2(t)}{dt^2} = \frac{B_1}{M_2}\frac{dz_1(t)}{dt} + \frac{B_1}{M_2}\frac{dz_2(t)}{dt} - \frac{B_2}{M_2}\frac{dz_2(t)}{dt} + \frac{K_1}{M_2}z_1(t) - \frac{K_2}{M_2}z_2(t)$ becomes

$$\frac{dw_4(t)}{dt} = \frac{B_1}{M_2}w_2(t) + \frac{B_1}{M_2}w_4(t) - \frac{B_2}{M_2}w_4(t) + \frac{K_1}{M_2}w_1(t) - \frac{K_2}{M_2}w_3(t)$$

Vertical Double Spring Mass Damper contd., (vi)

- The State Equations are

$$\frac{dw_1(t)}{dt} = w_2(t)$$

$$\frac{dw_2(t)}{dt} = \frac{1}{M_1}f(t) - \left(\frac{B_1}{M_1} + \frac{B_1}{M_2}\right)w_2(t) - \left(\frac{B_1}{M_1} + \frac{B_1}{M_2}\right)w_4(t) + \frac{B_2}{M_2}w_4(t) - \left(\frac{K_1}{M_1} + \frac{K_1}{M_2}\right)w_1(t) + \frac{K_2}{M_2}w_3(t)$$

$$\frac{dw_3(t)}{dt} = w_4(t)$$

$$\frac{dw_4(t)}{dt} = \frac{B_1}{M_2}w_2(t) + \frac{B_1}{M_2}w_4(t) - \frac{B_2}{M_2}w_4(t) + \frac{K_1}{M_2}w_1(t) - \frac{K_2}{M_2}w_3(t)$$

- Hence the State Space representation of the system is

$$\begin{pmatrix} \frac{dw_1(t)}{dt} \\ \frac{dw_2(t)}{dt} \\ \frac{dw_3(t)}{dt} \\ \frac{dw_4(t)}{dt} \end{pmatrix} = \begin{pmatrix} 0 & 1 & 0 & 0 \\ -\left(\frac{K_1}{M_1} + \frac{K_1}{M_2}\right) & -\left(\frac{B_1}{M_1} + \frac{B_1}{M_2}\right) & 0 & -\left(\frac{B_1}{M_1} + \frac{B_1 - B_2}{M_2}\right) \\ 0 & 0 & 0 & 1 \\ \frac{K_1}{M_2} & \frac{B_1}{M_2} & -\frac{K_2}{M_2} & +\frac{B_1 - B_2}{M_2} \end{pmatrix} \begin{pmatrix} w_1(t) \\ w_2(t) \\ w_3(t) \\ w_4(t) \end{pmatrix} + \begin{pmatrix} 0 \\ \frac{1}{M_1} \\ 0 \\ 0 \end{pmatrix} f(t)$$

$$y = \begin{pmatrix} 1 & 0 & 0 & 0 \\ 0 & 0 & 0 & 0 \\ 0 & 0 & 1 & 0 \\ 0 & 0 & 0 & 0 \end{pmatrix} \begin{pmatrix} w_1(t) \\ w_2(t) \\ w_3(t) \\ w_4(t) \end{pmatrix}$$

- Note there are two outputs as $w_1(t) = z_1(t)$ and $w_3(t) = z_2(t)$

Example 3: Vertically fixed torsion bar

- Draw the free body diagram of the disk
- Apply Newton's laws of motion to obtain the equation of motion.
- Hence obtain the transfer function from the torque input to the deflection angle.

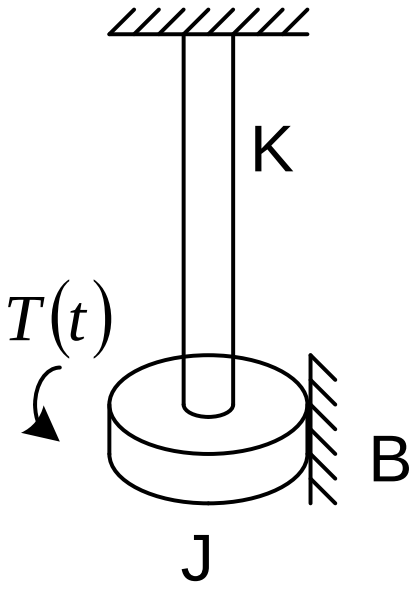

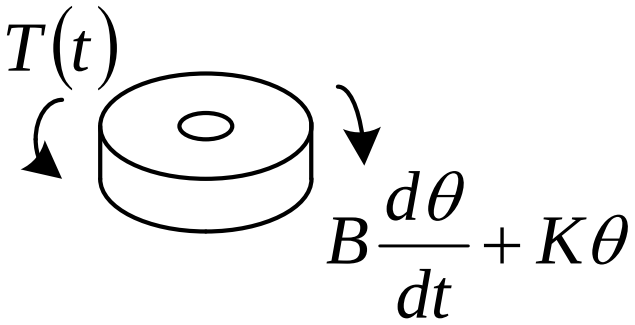

$$T(t) - B\frac{d\theta}{dt} - K\theta = J\frac{d^2\theta}{dt^2}$$

$$\frac{\theta(s)}{T(s)} = \frac{1}{Js^2 + Bs + K}$$

Department of Electrical and Electronic Engineering
University of Peradeniya
Deep Vision, Bright Future

Example 4: Flexible robot arm

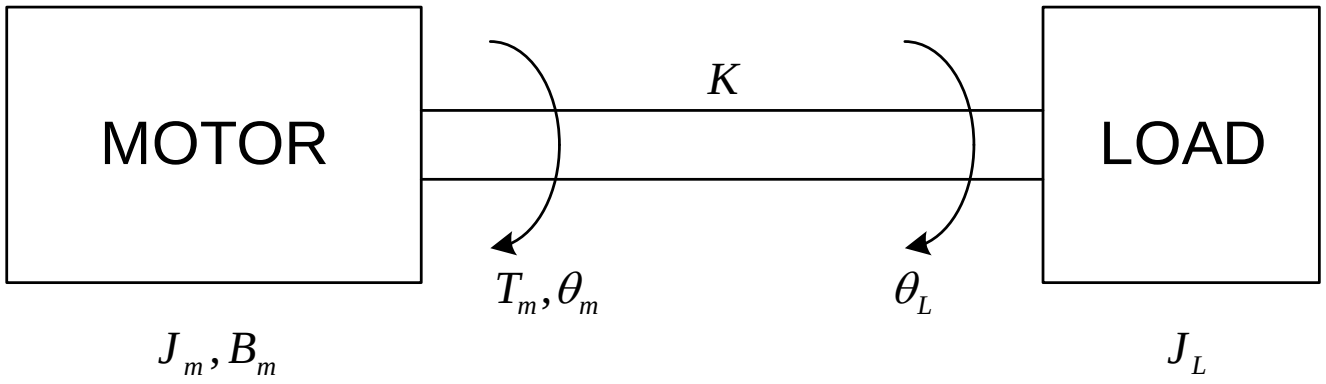

- Draw the free body diagrams
- Apply Newton's laws of motion to obtain the equation of motion.
- Hence obtain the state space representation of the system from the torque input from the motor to the deflection angle of the load.

Department of Electrical and Electronic Engineering
University of Peradeniya
Deep Vision, Bright Future

Example 4: Flexible robot arm contd.,

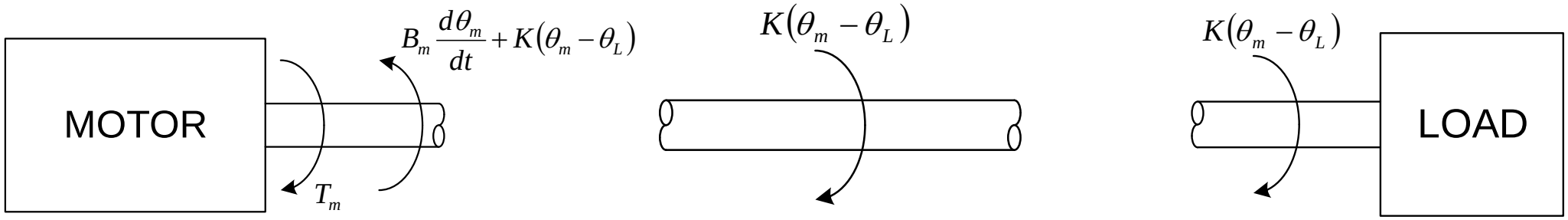

$$T_m(t) - B_m \frac{d\theta_m(t)}{dt} - K\big(\theta_m(t) - \theta_L(t)\big) = J_m \frac{d^2\theta_m(t)}{dt^2}$$

$$K\big(\theta_m(t) - \theta_L(t)\big) = J_L \frac{d^2\theta_L(t)}{dt^2}$$

Select the state matrix $x(t) = \begin{bmatrix} x_1(t) \\ x_2(t) \\ x_3(t) \end{bmatrix}$, where $x_1(t) = \theta_m(t) - \theta_L(t)$, $x_2(t) = \frac{d\theta_L(t)}{dt}$ and $x_3(t) = \frac{d\theta_m(t)}{dt}$

$$\frac{dx(t)}{dt} = \begin{bmatrix} 0 & 1 & -1 \\ \frac{K}{J_L} & 0 & 0 \\ -\frac{K}{J_m} & -\frac{B_m}{J_m} & 0 \end{bmatrix} x(t) + \begin{bmatrix} 0 \\ 0 \\ \frac{1}{J_m} \end{bmatrix} T_m(t)$$

Department of Electrical and Electronic Engineering
University of Peradeniya
Deep Vision, Bright Future

Example 5: Armature controlled dc motor

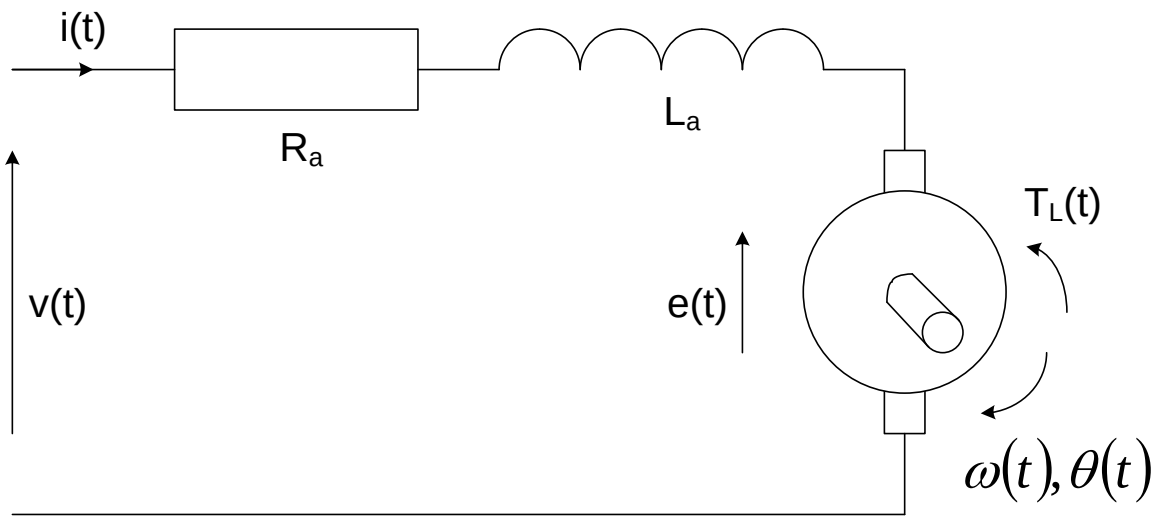

- Use the laws of physics to obtain the dynamic equations of the dc motor system.
- Hence obtain the transfer function from the voltage input to the speed output.
- Represent the system containing electrical and mechanical sub systems using block diagrams

Department of Electrical and Electronic Engineering
University of Peradeniya
Deep Vision, Bright Future

Example 5: Armature controlled dc motor contd.,

$$v(t) = R_a i_a(t) + L_a \frac{di_a(t)}{dt} + e_a(t) \rightarrow \big(V(s) - E_a(s)\big)\frac{1}{(R_a + L_a s)} = I_a(s)$$

$$e_a(t) = K_e \omega(t) \rightarrow E_a(s) = K_e \omega(s)$$

$$\tau_{ind}(t) - \tau_L(t) - B\omega(t) = J\frac{d\omega(t)}{dt} \rightarrow \big(\tau_{ind}(s) - \tau_L(s)\big)\frac{1}{(B + Js)} = \omega(t)$$

$$\tau_{ind}(t) = K_t i_a(t) \rightarrow \tau_{ind}(s) = K_t I_a(s)$$

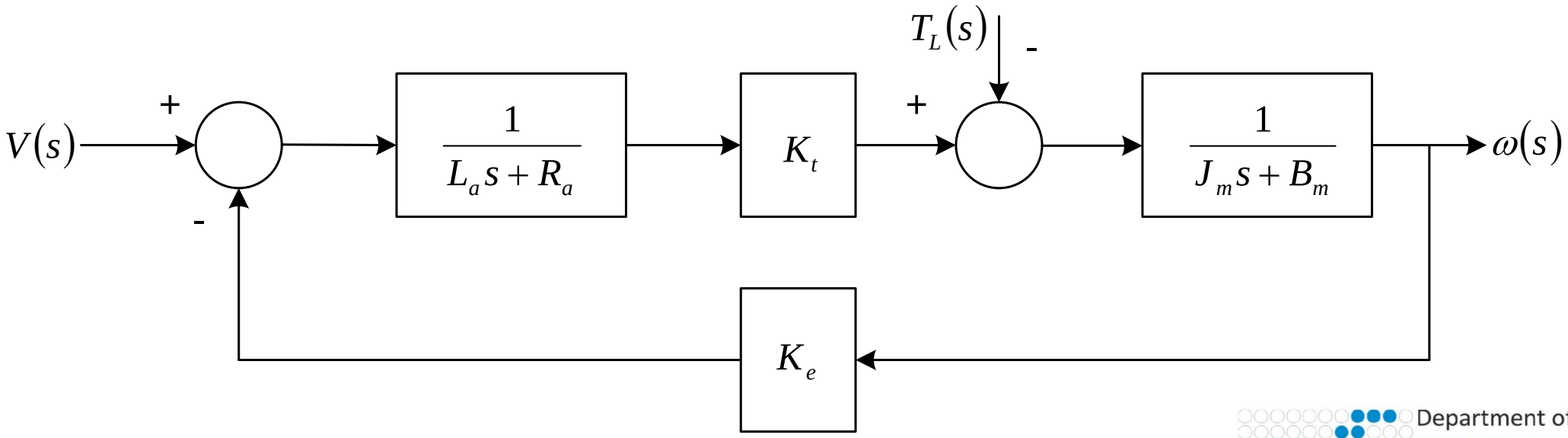

Department of Electrical and Electronic Engineering
University of Peradeniya
Deep Vision, Bright Future